Advanced Mechatronics Engineering

Islam S. M. Khalil

German University in Cairo

September 3, 2016

Outline

- Motivation
- Agenda
- Linear systems
- State transition matrix

Motivation

Targeted Drug Delivery

Wireless motion control of microrobots under the influence of controlled magnetic fields (delicate retinal surgeries).

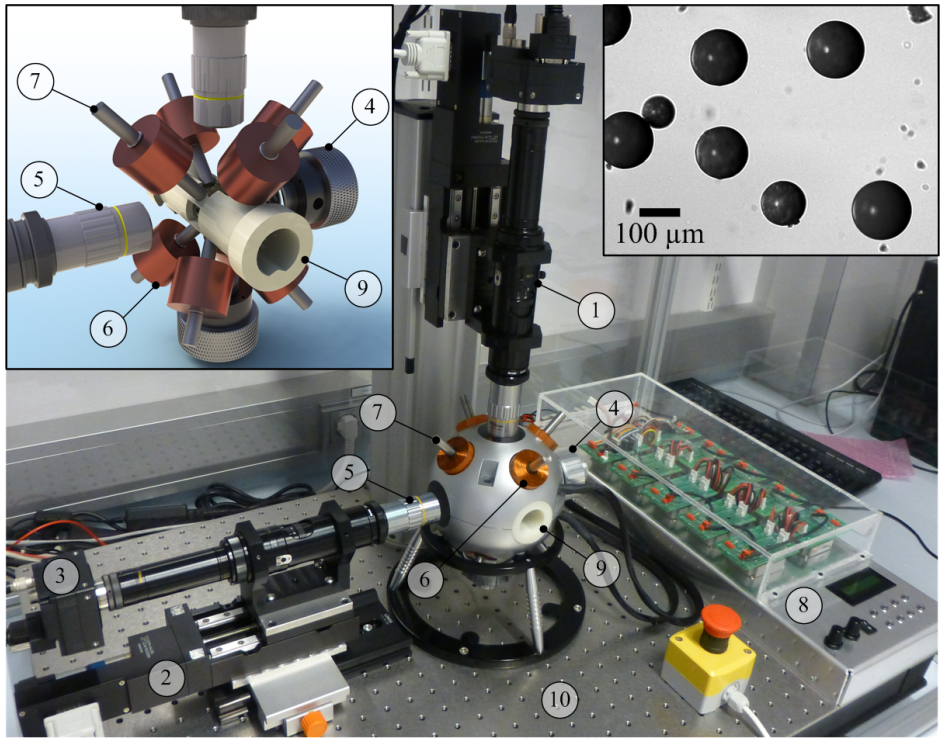

Figure: Electromagnetic system for the wireless control of drug carriers (Khalil *et al.*, Applied Physics Letters, 2013).

Targeted Drug Delivery

Motion control of drug carriers through the spinal cord.

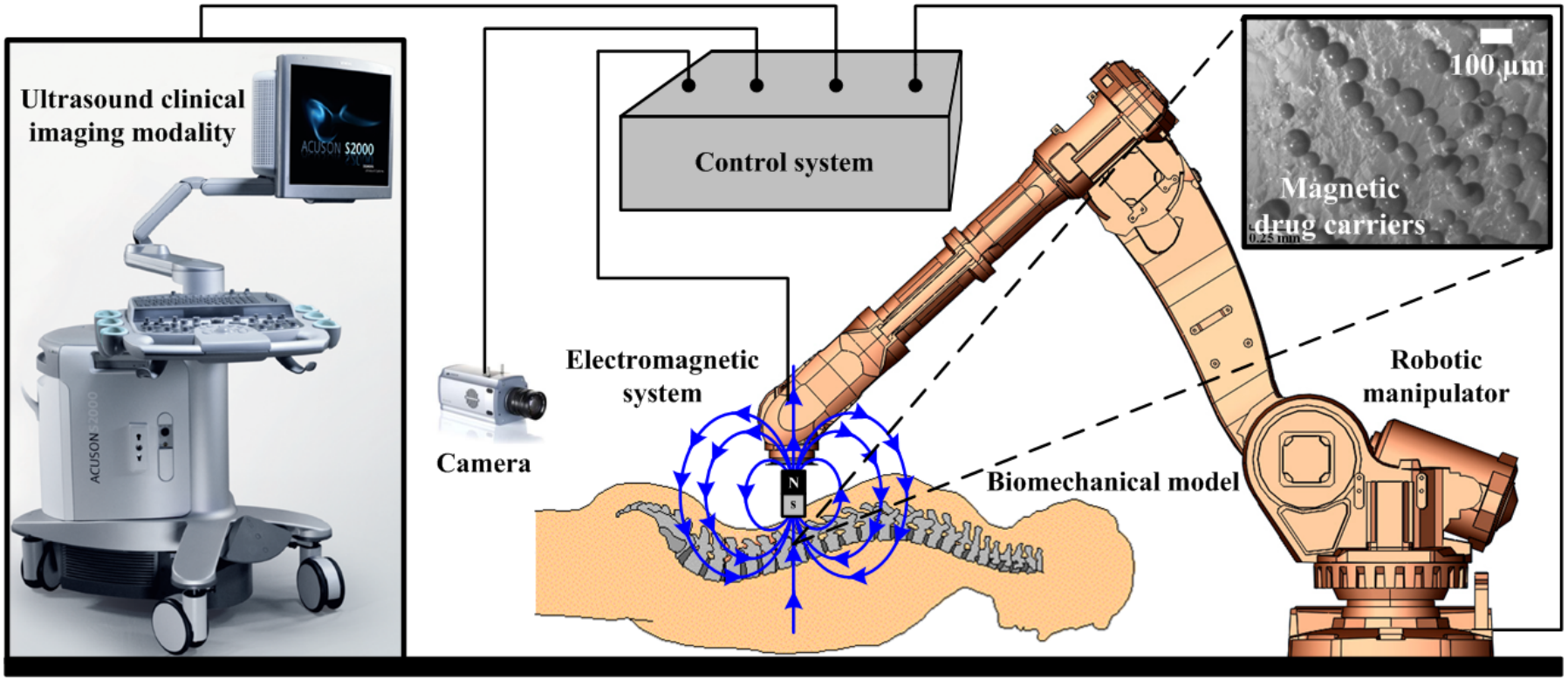

Figure: Electromagnetic system for the wireless control of drug carriers.

Motivation

Targeted Drug Delivery

Wireless motion control of self-propelled microjets.

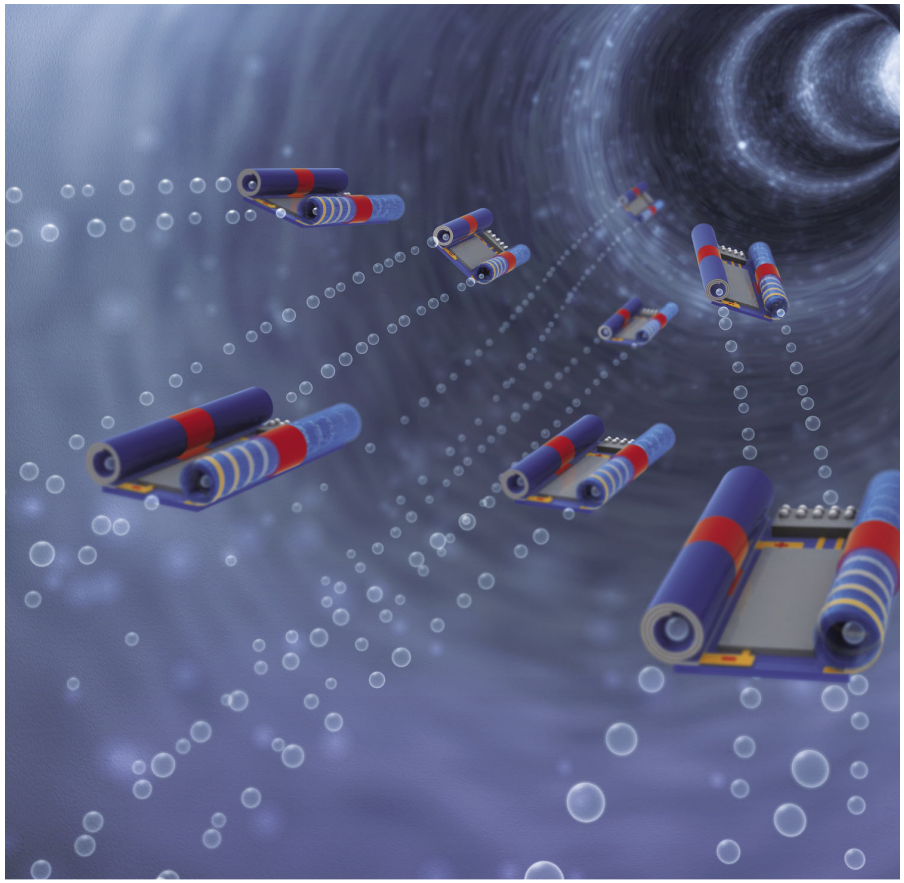

Figure: Self-propelled microjets (Image courtesy of Oliver G. Schmidt).

Motivation

Biological Cells Characterization and Manipulation

Transparent bilateral control systems are used to characterize biological cell and perform surgeries with minimal interventions.

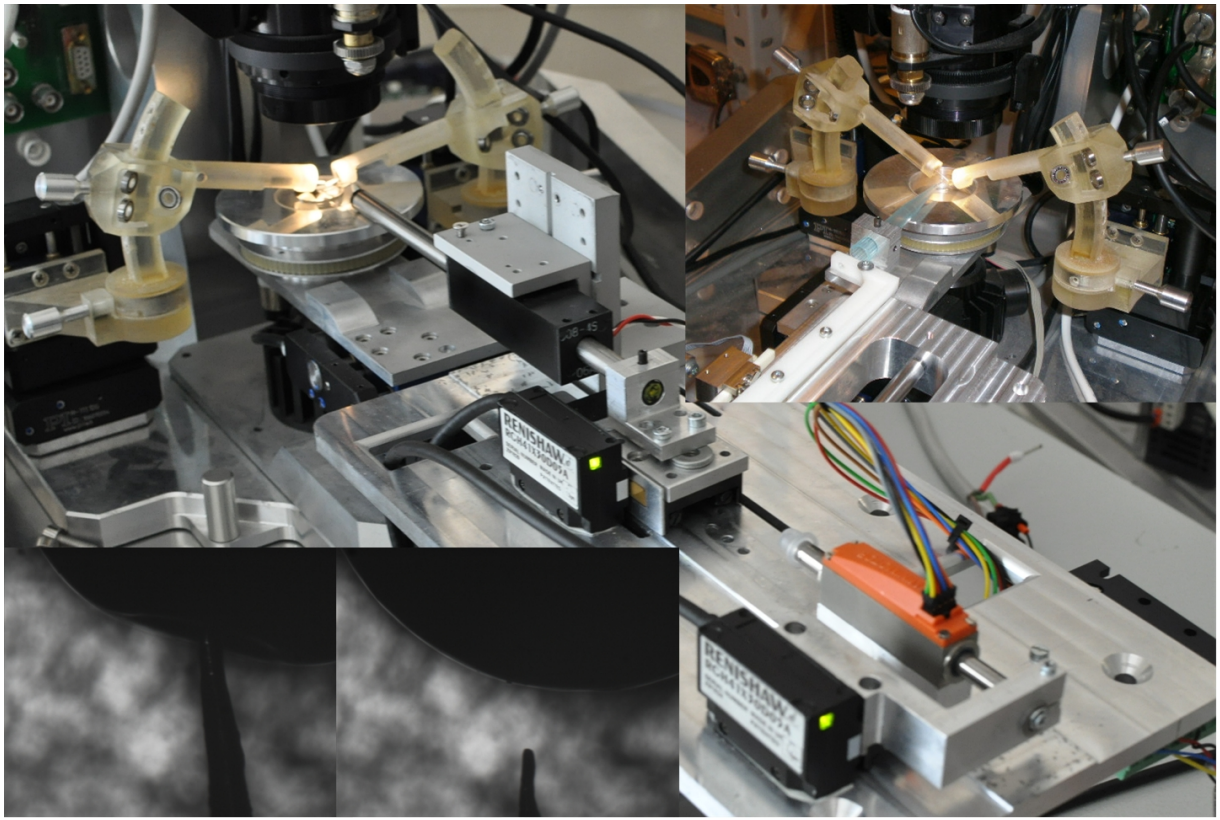

Figure: Drug injection in a cell using a bilateral control system.

Motivation

Delta Robot

Relatively high speeds and reasonable rigidity are combined.

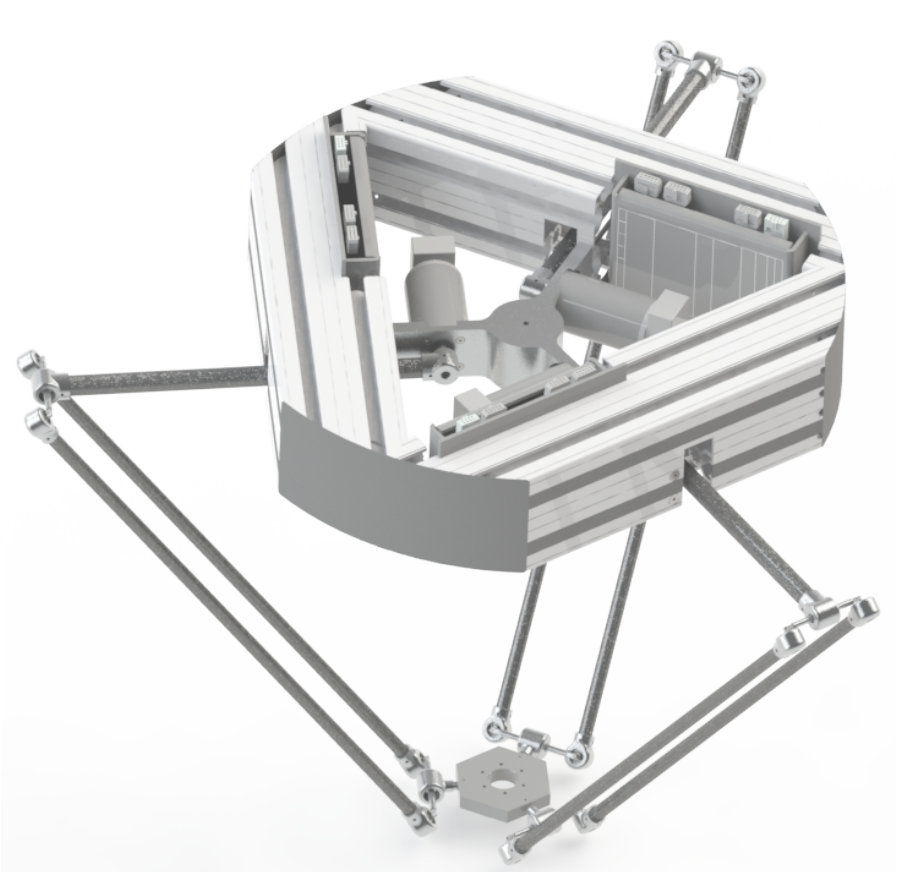

Figure: Delta robot with three active and three passive joints.

Motivation

Pantograph mechanism

High precision motion control.

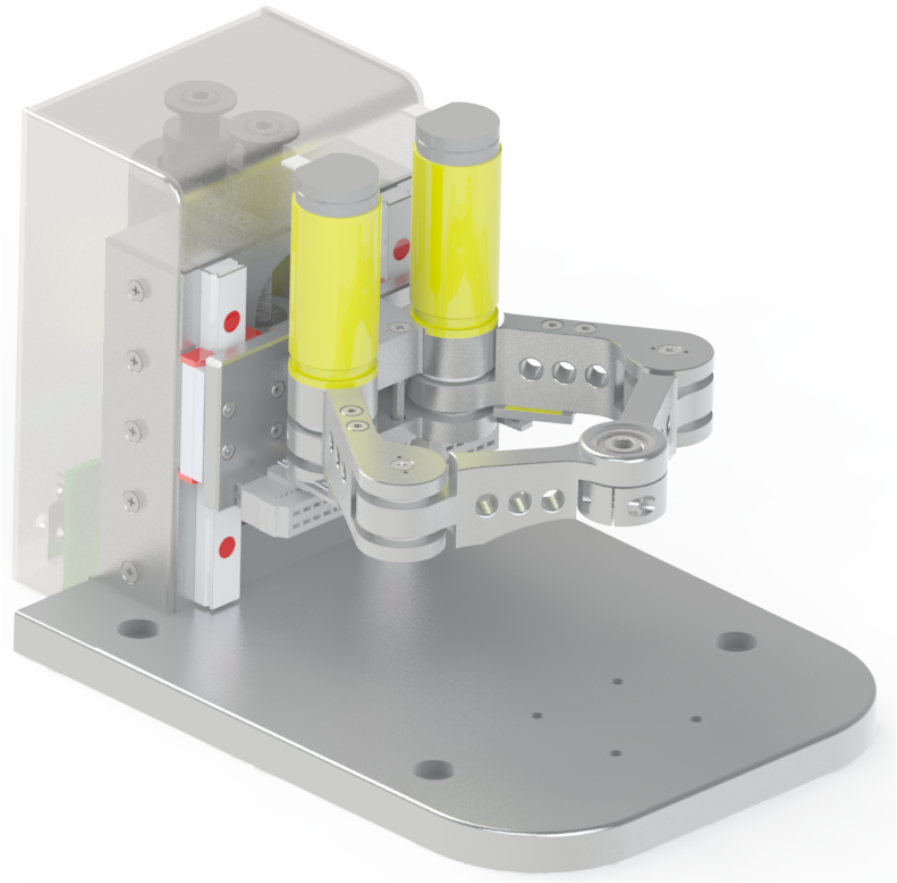

Figure: Pantograph mechanism for micromachining and microassembly.

Motivation

Linear Motion Stage

High precision motion control.

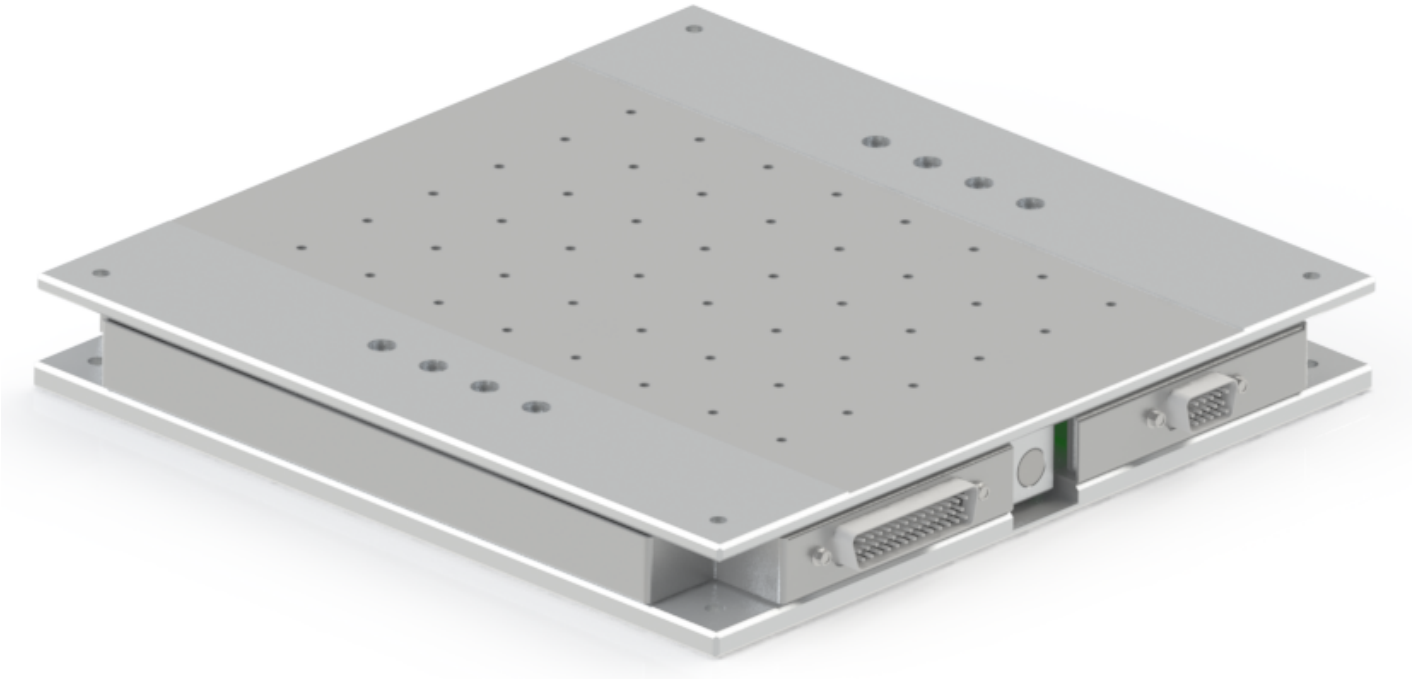

Figure: Linear motion stage for micromachining and microassembly.

Agenda

Week	Topics
1	Similarity transformations, diagonal and Jordan forms, ...
2	Lyapunov equation, quadratic form and +/- definiteness, ...
3	Singular value decomposition, norms of matrices, ...
4	Controllability, observability, canonical decomposition, ...
5	Teleoperation using 2-channel control architectures, ...
6	Qualitative behavior near equilibrium points, limit cycles, ...
7	Lyapunov stability, ...
8	Input output stability, ...
9	Feedback system: The small gain theorem, ...
10	Passivity, memoryless functions, state models, ...
11	Passivity theorem, absolute stability, circle criterion, ...
12	Bilateral control of nonlinear teleoperation, ...
13	Real-time operating systems, deadlock, ...
14	Schedulability tests, hard and soft real-time, ...

Consider the scalar case

$$\dot{x}(t) = ax(t). \tag{1}$$

Taking the Laplace transform of (1), we obtain

$$sX(s) - x(0) = aX(s), \tag{2}$$

$$X(s) = \frac{x(0)}{s-a} = (s-a)^{-1}x(0). \tag{3}$$

Finally, inverse Laplace transform of (3) yields

$$x(t) = e^{at}x(0). \tag{4}$$

State Transition Matrix

Now consider the following homogenous state equation

$$\dot{\mathbf{x}}(t) = \mathbf{A}\mathbf{x}(t). \tag{5}$$

$$s\mathbf{X}(s) - \mathbf{x}(0) = \mathbf{A}\mathbf{X}(s), \tag{6}$$

$$\mathbf{X}(s) = (s\mathbf{I} - \mathbf{A})^{-1}\mathbf{x}(0). \tag{7}$$

The inverse Laplace transform yields

$$\mathbf{x}(t) = \mathcal{L}^{-1}\left[(s\mathbf{I} - \mathbf{A})^{-1}\right]\mathbf{x}(0) = e^{\mathbf{A}t}\mathbf{x}(0). \tag{8}$$

Therefore, the state transition matrix ($e^{\mathbf{A}t}$) is given by

$$e^{\mathbf{A}t} = \mathcal{L}^{-1}\left[(s\mathbf{I} - \mathbf{A})^{-1}\right]. \tag{9}$$

State Transition Matrix

- Calculate the state transition matrix of the following system

$$\begin{bmatrix}\dot{x}_1\\ \dot{x}_2\end{bmatrix} = \begin{bmatrix}-1 & 0\\ 2 & -3\end{bmatrix}\begin{bmatrix}x_1\\ x_2\end{bmatrix} \quad (10)$$

$$[s\mathbf{I}-\mathbf{A}] = \begin{bmatrix}(s+1) & 0\\ -2 & (s+3)\end{bmatrix} \quad (11)$$

$$[s\mathbf{I}-\mathbf{A}]^{-1} = \begin{bmatrix}\frac{(s+3)}{(s+1)(s+3)} & 0\\ \frac{2}{(s+1)(s+3)} & \frac{(s+1)}{(s+1)(s+3)}\end{bmatrix}$$

$$= \begin{bmatrix}\frac{1}{(s+1)} & 0\\ \left(\frac{1}{(s+1)}-\frac{1}{(s+1)}\right) & \frac{1}{(s+3)}\end{bmatrix}$$

$$e^{\mathbf{A}t} = \mathcal{L}^{-1}\left[(s\mathbf{I}-\mathbf{A})^{-1}\right], \quad (12)$$

$$e^{\mathbf{A}t} = \begin{bmatrix}e^{-t} & 0\\ (e^{-t}-e^{-3t}) & e^{-3t}\end{bmatrix}.$$

State Transition Matrix

- Calculate the state transition matrix of the following system

$$\begin{bmatrix} \dot{x}_1 \\ \dot{x}_2 \end{bmatrix} = \begin{bmatrix} 0 & 1 \\ -2 & -3 \end{bmatrix} \begin{bmatrix} x_1 \\ x_2 \end{bmatrix} \qquad (13)$$

$$[s\mathbf{I} - \mathbf{A}] = \begin{bmatrix} s & -1 \\ 2 & (s+3) \end{bmatrix} \qquad (14)$$

$$[s\mathbf{I} - \mathbf{A}]^{-1} = \begin{bmatrix} \frac{(s+3)}{(s+1)(s+2)} & \frac{1}{(s+1)(s+2)} \\ \frac{-2}{(s+1)(s+2)} & \frac{s}{(s+1)(s+2)} \end{bmatrix}$$

$$e^{\mathbf{A}t} = \mathcal{L}^{-1}\left[(s\mathbf{I} - \mathbf{A})^{-1}\right], \qquad (15)$$

$$= \begin{bmatrix} 2e^{t} - e^{-2t} & e^{-t} - e^{-2t} \\ -2e^{-t} + 2e^{-2t} & -e^{-t} + 2e^{-2t} \end{bmatrix}.$$

State Transition Matrix

If the matrix $\mathbf{A}$ can be transformed into a diagonal form, then the state transition matrix $e^{\mathbf{A}t}$ is given by

$$e^{\mathbf{A}t} = \mathbf{P}e^{\mathbf{D}t}\mathbf{P}^{-1} = \mathbf{P}\begin{bmatrix} e^{\lambda_1 t} & 0 & \dots & 0 \\ 0 & e^{\lambda_2 t} & \dots & 0 \\ \vdots & \dots & \ddots & 0 \\ 0 & \dots & 0 & e^{\lambda_n t} \end{bmatrix}\mathbf{P}^{-1}, \qquad (16)$$

where $\mathbf{P}$ is a digonalizing matrix for $\mathbf{A}$. Further, λ_i is the ith eigenvalue of the matrix $\mathbf{A}$, for $i = 1, \dots, n$.

State Transition Matrix

Derivation: Consider the following homogenous state equation

$$\dot{\mathbf{x}} = \mathbf{A}\mathbf{x}, \tag{17}$$

and the following similarity transformation:

$$\mathbf{x} = \mathbf{P}\xi \quad , \quad \dot{\mathbf{x}} = \mathbf{P}\dot{\xi}. \tag{18}$$

Substituting (18) in (17) yields

$$\dot{\xi} = \mathbf{P}^{-1}\mathbf{A}\mathbf{P}\xi = \mathbf{D}\xi. \tag{19}$$

Solution of (19) is

$$\xi(t) = e^{\mathbf{D}t}\xi(0), \tag{20}$$

using (18)

$$\mathbf{x}(t) = \mathbf{P}\xi(t) = \mathbf{P}e^{\mathbf{D}t}\xi(0) \quad , \quad \mathbf{x}(0) = \mathbf{P}\xi(0). \tag{21}$$

Therefore

$$\mathbf{x}(t) = \mathbf{P}e^{\mathbf{D}t}\mathbf{P}^{-1}\mathbf{x}(0) = e^{\mathbf{A}t}\mathbf{x}(0). \tag{22}$$

State Transition Matrix

- Calculate the state transition matrix of the following system

$$\begin{bmatrix} \dot{x}_1 \\ \dot{x}_2 \end{bmatrix} = \begin{bmatrix} 0 & 1 \\ 0 & -2 \end{bmatrix} \begin{bmatrix} x_1 \\ x_2 \end{bmatrix} \tag{23}$$

The eigenvalues of $\mathbf{A}$ are $\lambda_1 = 0$ and $\lambda_2 = -2$. A similarity transformation matrix $\mathbf{P}$ is

$$\mathbf{P} = \begin{bmatrix} 1 & 1 \\ 0 & -2 \end{bmatrix}. \tag{24}$$

Using (16) to calculate the state transition matrix

$$e^{\mathbf{A}t} = \mathbf{P} e^{\mathbf{D}t} \mathbf{P}^{-1} \tag{25}$$

$$= \begin{bmatrix} 1 & 1 \\ 0 & -2 \end{bmatrix} \begin{bmatrix} e^0 & 0 \\ 0 & e^{-2t} \end{bmatrix} \begin{bmatrix} 1 & \frac{1}{2} \\ 0 & -\frac{1}{2} \end{bmatrix}$$

$$e^{\mathbf{A}t} = \begin{bmatrix} 1 & \frac{1}{2}(1 - e^{-2t}) \\ 0 & e^{-2t} \end{bmatrix}. \tag{26}$$

References

1. Khalil ISM, Pichel MP, Abelmann L, Misra S. Closed-loop control of magnetotactic bacteria. The International Journal of Robotics Research. 2013;32(6):637-649. doi:10.1177/0278364913479412
2. E. D. Kunt , A. T. Naskalı , İ. S. M. Khalıl , A. Sabanovıc and E. Yüksel , "Design and development of workstation for microparts manipulation and assembly", Turkish Journal of Electrical Engineering and Computer Science, vol. 19, no. 6, pp. 973-992, Jun. 2011
3. I. S. M. Khalil, A. Sabanovic and S. Misra, "An energy-based state observer for dynamical subsystems with inaccessible state variables," 2012 IEEE/RSJ International Conference on Intelligent Robots and Systems, 2012, pp. 3734-3740, doi: 10.1109/IROS.2012.6386188.
4. I. S. M. Khalil, E. Globovic and A. Sabanovic, "High precision motion control of parallel robots with imperfections and manufacturing tolerances," 2011 IEEE International Conference on Mechatronics, 2011, pp. 39-44, doi: 10.1109/ICMECH.2011.5971332.
5. I. S. M. Khalil, B. E. Wissa, B. G. Salama and S. Stramigioli, "Wireless motion control of paramagnetic microparticles using a magnetic-based robotic system with an open-configuration," 2015 International Conference on Manipulation, Manufacturing and Measurement on the Nanoscale (3M-NANO), 2015, pp. 190-196, doi: 10.1109/3M-NANO.2015.7425484.