Advanced Mechatronics Engineering

Islam S. M. Khalil

German University in Cairo

Block diagram of a manipulator control system.

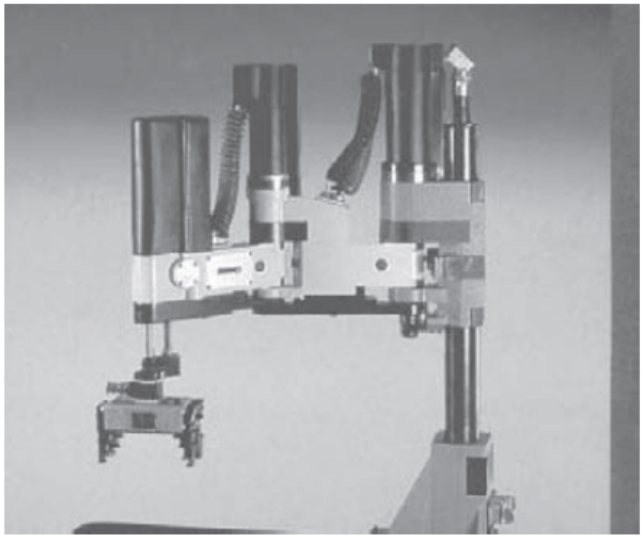

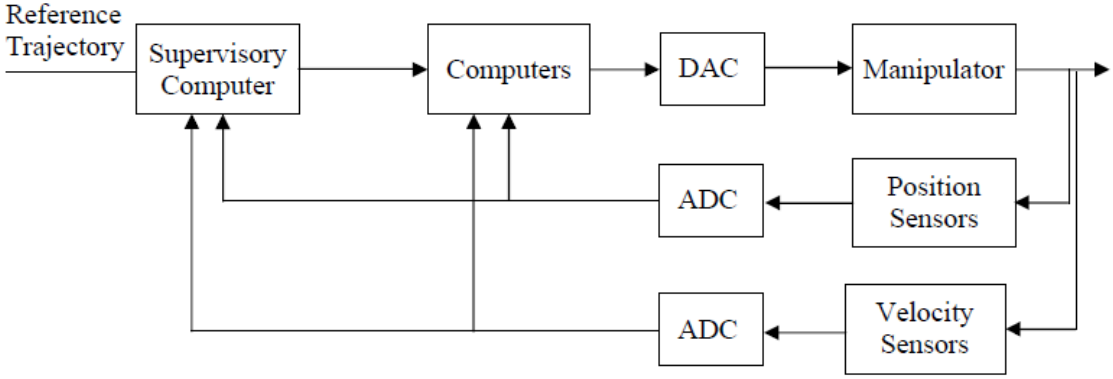

Figure: Robotic manipulator control system

Example. Find the equivalent sampled impulse response sequence and the equivalent z-transfer function for the cascade of the two analog systems with sampled input

$$H_1(s) = \frac{1}{s+2} \qquad H_2(s) = \frac{2}{s+4}$$

1. If the systems are directly connected
2. If the systems are separated by a sampler

Solution.

1. In the absence of samplers between the systems, the overall transfer function is

$$H(s) = \frac{2}{(s+2)(s+4)} = \frac{1}{s+2} - \frac{1}{s+4}$$

The impulse response of the cascade is $h(t) = e^{-2t} - e^{-4t}$

The z-Plane and the Unit Circle

The impulse response of the cascade is

$$h(t) = e^{-2t} - e^{-4t}$$

and the sampled impulse response is

$$h(kT) = e^{-2kT} - e^{-4kT}, \qquad k = 0, 1, 2, \ldots$$

Thus, the z-domain transfer function is

$$H(z) = \frac{z}{z - e^{-2T}} - \frac{z}{z - e^{-4T}} = \frac{(e^{-2T} - e^{-4T})z}{(z - e^{-2T})(z - e^{-4T})}$$

2. If the analog systems are separated by a sampler, then each has a z-domain transfer function, and the transfer functions are given by

$$H_1(z) = \frac{z}{z - e^{-2T}} \qquad H_2(z) = \frac{2z}{z - e^{-4T}}$$

The overall transfer function for the cascade is

$$H(z) = \frac{2z^2}{(z - e^{-2T})(z - e^{-4T})}$$

The partial fraction expansion of the transfer function is

$$H(z) = \frac{2}{e^{-2T} - e^{-4T}} \left(\frac{e^{-2T} z}{z - e^{-2T}} - \frac{e^{-4T} z}{z - e^{-4T}} \right)$$

clearly shows the effect of placing a sampler between analog blocks on the impulse responses and the corresponding z-domain transfer function.

The z-Plane and the Unit Circle

Example. Let us examine the zeros and poles of the following system for several sampling times

$$H(s) = \frac{2}{(s+2)(s+4)} = \frac{1}{s+2} - \frac{1}{s+4}$$

```
s = tf('s');
sys = 2/((s + 2) * (s + 4));
figure
pzplot(sys)
grid
Ts = 1/100;
sysd = c2d(sys, Ts,' zoh')
figure
pzmap(sysd)
zgrid
```

The z-Plane and the Unit Circle

Ts=0.001 s.

$$H(z) = \frac{9.98e^{-7}z + 9.96e^{-7}}{z^2 - 1.994z + 0.994}$$

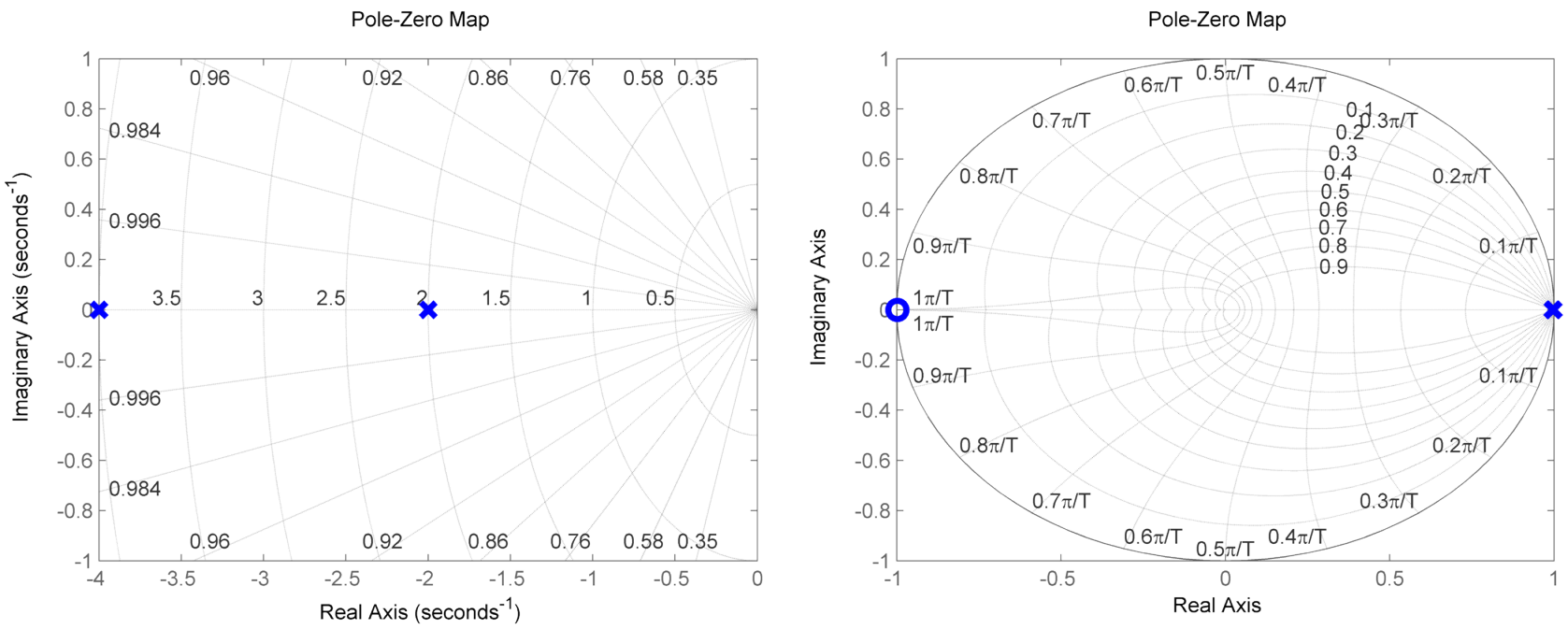

Figure: Discrete system: Zeros: -0.998. Poles: 0.998 and 0.996

The z-Plane and the Unit Circle

Ts=0.01 s.

$$H(z) = \frac{9.802e^{-5}z + 9.608e^{-5}}{z^2 - 1.941z + 0.9418}$$

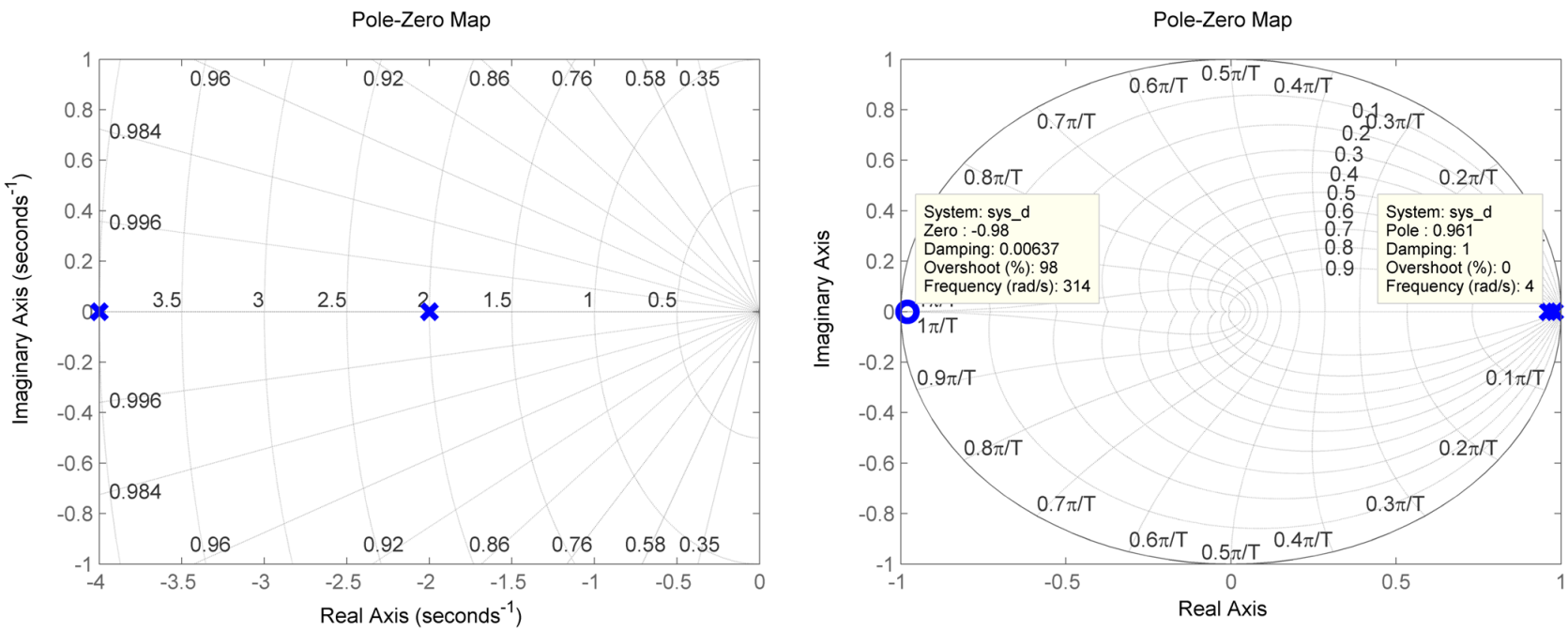

Figure: Discrete system: Zeros: -0.9802. Poles: 0.9802 and 0.9608

Ts=0.1 s.

$$H(z) = \frac{0.008215z + 0.006726}{z^2 - 1.489z + 0.5488}$$

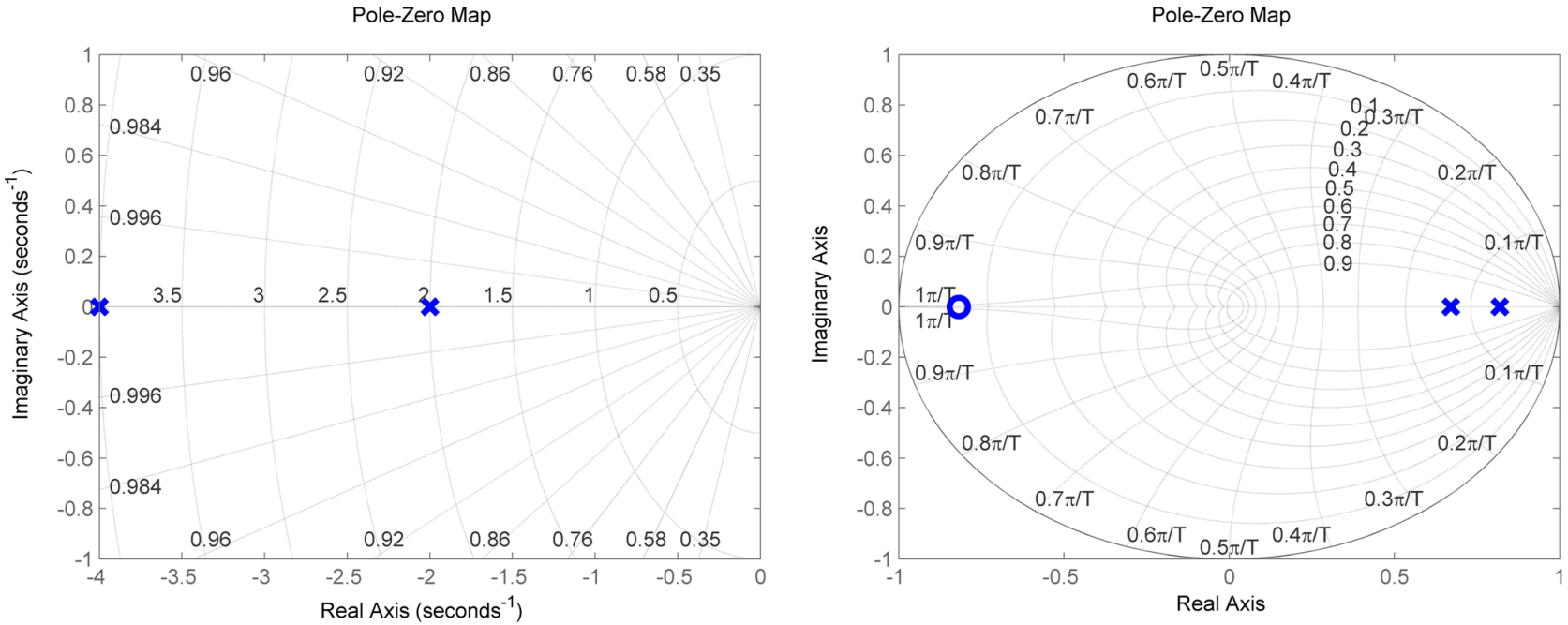

Figure: Discrete system: Zeros: -0.8187. Poles: 0.8187 and 0.6703

Ts=1 s.

$$H(z) = \frac{0.1869z + 0.0253}{z^2 - 0.1537z + 0.002479}$$

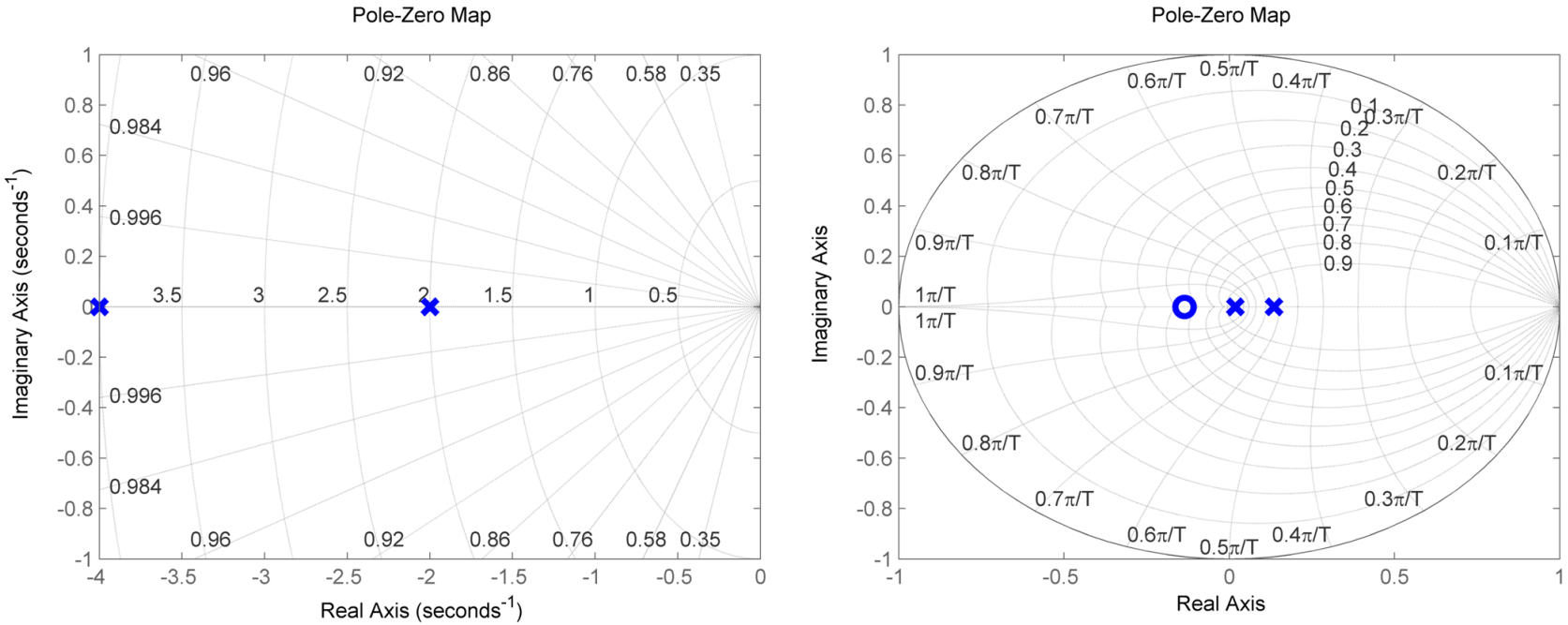

Figure: Discrete system: Zeros: -0.1353. Poles: 0.1353 and 0.0183

Definitions of stability

The most commonly used definitions of stability are based on the magnitude of the system response in the steady-state. If the steady-state response is unbounded, the system is said to be unstable.

ASYMPTOTIC STABILITY

A system is said to be asymptotically stable if its response to any initial conditions decays to zero asymptotically in the steady statethat is, the response due to the initial conditions satisfies

$$\lim_{k \to \infty} y(k) = 0$$

If the response due to the initial conditions remains bounded but does not decay to zero, the system is said to be marginally stable.

Definitions of stability

The second definition of stability concerns the forced response of the system for a bounded input. A bounded input satisfies the condition

BOUNDED-INPUT-BOUNDED-OUTPUT STABILITY

A system is said to be bounded-input-bounded-output (BIBO) stable if its response to any bounded input remains boundedthat is, for any input satisfying (4.2), the output satisfies

$$| y(k) | \leq b_y, \quad k = 0, 1, 2, \ldots \quad (0 \leq b_y \leq \infty)$$

Stable z-domain pole locations

Consider the sampled exponential and its z-transform

$$p^k, \quad k = 0, 1, 2, \ldots \quad \Longleftrightarrow \frac{z}{z-p}$$

where p is real or complex. Then the time sequence for large k is given by

$$\mid p \mid^k \longrightarrow \begin{cases} 0, & \mid p \mid \leq 1; \\ 1, & \mid p \mid = 1; \\ \infty, & \mid p \mid > 1. \end{cases}$$

Any time sequence can be described by

$$f(k) = \sum_{i=1}^{n} A_i p_i^k, \quad k = 0, 1, 2, \ldots \quad \Longleftrightarrow F(z) = \sum_{i=1}^{n} A_i \frac{z}{z-p_i}$$

Stable z-domain pole locations

$$f(k) = \sum_{i=1}^{n} A_i p_i^k, \quad k = 0, 1, 2, \ldots \quad \Longleftrightarrow F(z) = \sum_{i=1}^{n} A_i \frac{z}{z - p_i}$$

where A_i are partial fraction coefficients and p_i are z-domain poles. Hence, we conclude that the sequence is bounded if its poles lie the unit circle and decays exponentially if its poles lie inside the unit circle. This conclusion allows us to derive stability conditions based on the locations of the system poles. Note that the case of repeated poles on the unit circle corresponds to an unbounded time sequence.

ASYMPTOTIC STABILITY

In the absence of pole-zero cancellation, an LTI digital system is asymptotically stable if its transfer function poles are in the open unit disc and marginally stable if the poles are in the closed unit disc with no repeated poles on the unit circle.

The closed-loop transfer function

The block diagram includes a comparator, a digital controller with transfer function $C(z)$, and the ADC-analog subsystem-DAC transfer function $G(z)$.

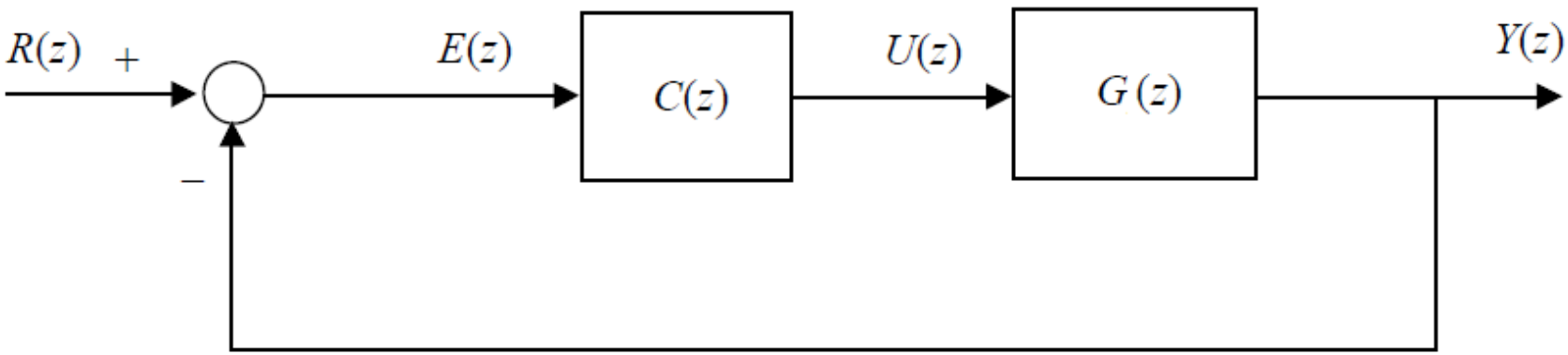

Figure: Block diagram of a single-loop digital control system

The block diagram is identical to those commonly encountered in s-domain analysis of analog systems, with the variable s replaced by z. Hence, the closed-loop transfer function is given by

$$G_{cl}(z) = \frac{C(z)G(z)}{1 + C(z)G(z)}$$

The closed-loop transfer function

and the closed-loop characteristic equation is

$$1 + C(z)G(z) = 0$$

The roots of the equation are the closed-loop system poles, which can be selected for desired time response specifications as in s-domain design.

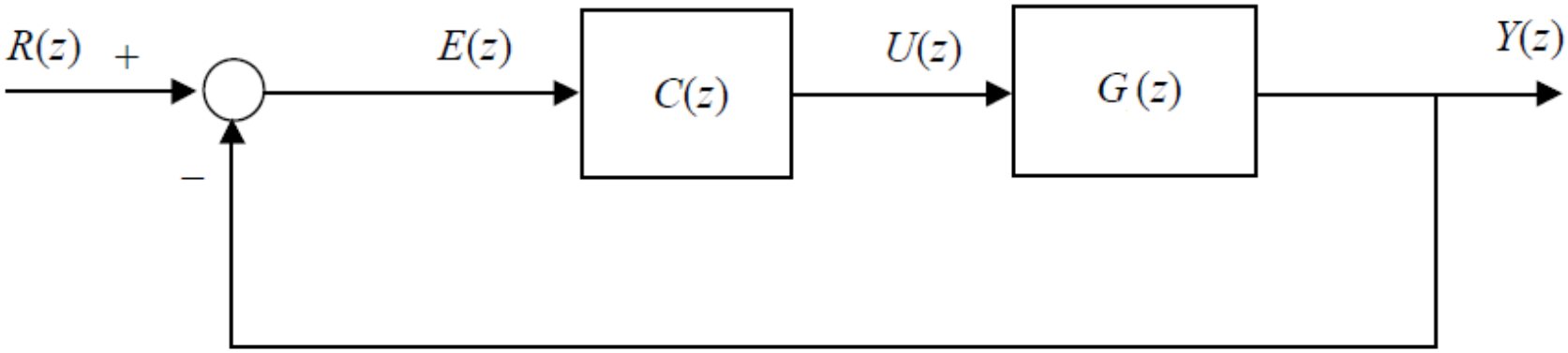

Figure: Block diagram of a single-loop digital control system

The closed-loop transfer function

If the controller is assumed to include a constant gain multiplied by a rational z-transfer function, then $1 + C(z)G(z) = 0$ is equivalent to

$$1 + KL(z) = 0$$

where $L(z)$ is the open-loop control gain. $1 + KL(z) = 0$ is identical in form to the s-domain characteristic equation (5.1) with the variable s replaced by z. Thus, all the rules derived in s-domain can be used to obtain z-domain root locus plots.

Example. Obtain the root locus plot and the critical gain for the first-order type 1 system with loop gain

$$L(z) = \frac{1}{z-1}$$

The closed-loop transfer function

Using root locus rules gives the root locus plot below, which can be obtained using the MATLAB command **rlocus**. The root locus lies entirely on the real axis between the open-loop pole and the open-loop zero. For a stable discrete system, real axis z-plane poles must lie between the point $(-1, 0)$ and the point $(1, 0)$. The critical gain for the system corresponds to the point $(-1, 0)$. The closed-loop characteristic equation of the system is $z - 1 + K = 0$. Substituting $z = -1$ gives the critical gain $K_{cr} = 2$.

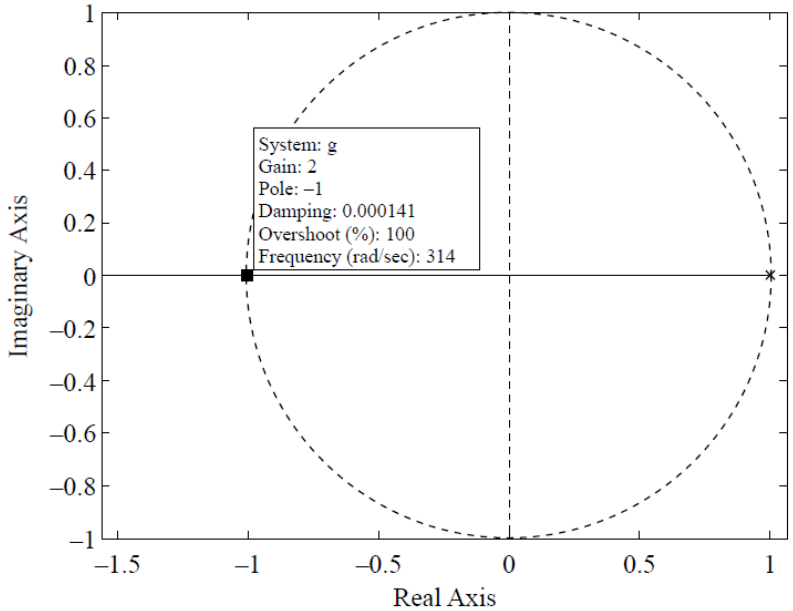

The closed-loop transfer function

Example. Obtain the root locus plot and the critical gain for the first-order type 1 system with loop gain

$$L(z) = \frac{1}{(z-1)(z-0.5)}$$

The breakaway point is midway between the two open-loop poles at $z_b = 0.75$. The critical gain now occurs at the intersection of the root locus with the unit circle. To obtain the critical gain value, first write the closed-loop characteristic equation

$$(z-1)(z-0.5) + K = z^2 - 1.5z + K + 0.5 = 0$$

On the unit circle, the closed-loop poles are complex conjugate and of magnitude unity. Hence, the magnitude of the poles satisfies the equation

$$\mid z_{1,2} \mid^2 + K_{cr} + 0.5 = 0$$

The closed-loop transfer function

$$| z_{1,2} |^2 + K_{cr} + 0.5 = 0$$

where K_{cr} is the critical gain. The critical gain is equal to 0.5, which, from the closed-loop characteristic equation, corresponds to unit circle poles at

$$z_{1,2} = 0.75 \pm j0.661$$

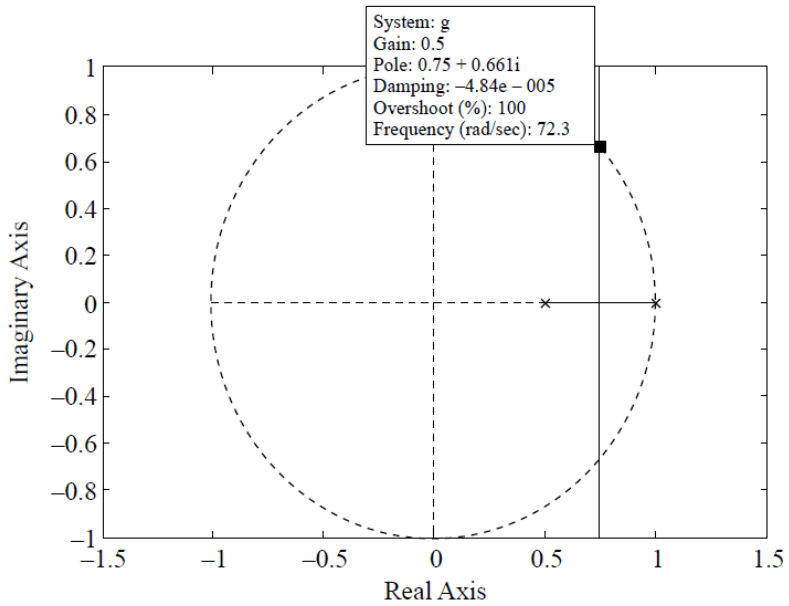

Figure: Root locus of a type 1 second-order system

The closed-loop transfer function

The z-domain characteristic polynomial for a second-order under-damped system is

$$(z-e^{(-\zeta\omega_n+j\omega_d)T})(z-e^{(-\zeta\omega_n-j\omega_d)T}) = z^2-2\cos(\omega_d T)e^{-\zeta\omega_n T}+e^{-2\zeta\omega_n T}$$

Hence, the poles of the system are given by

$$z_{1,2} = e^{-\zeta\omega_n T} \pm \omega_d T$$

This confirms that constant $\zeta\omega_n$ contours are circles, whereas constant ω_d contours are radial lines.

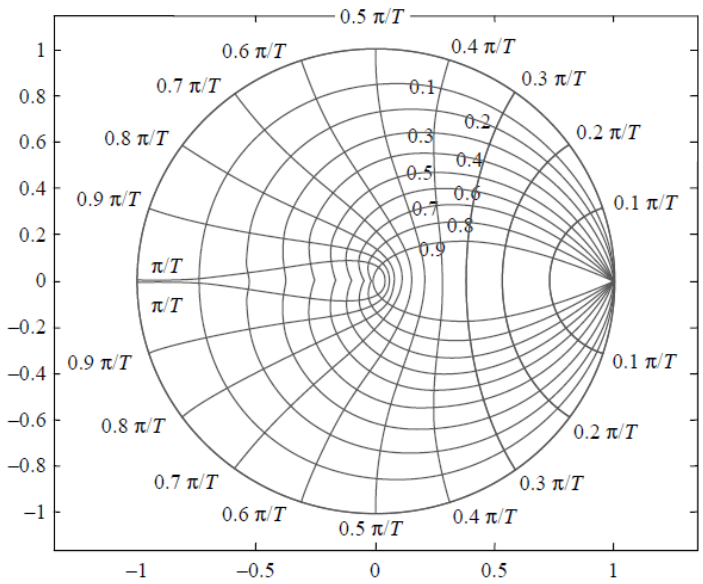

The closed-loop transfer function

Constant ζ lines are logarithmic spirals that get smaller for larger values of ζ. The spirals are defined by the equation

$$| z | = e^{\frac{-\zeta\theta}{\sqrt{1-\zeta^2}}} = e^{\frac{-\zeta(\pi\theta/180^\circ)}{\sqrt{1-\zeta^2}}}$$

where $| z |$ is the magnitude of the pole and θ is its angle. Constant ω_n contours are defined by the equation $| z | = e^{-\sqrt{(\omega_n T)^2-\theta^2}}$

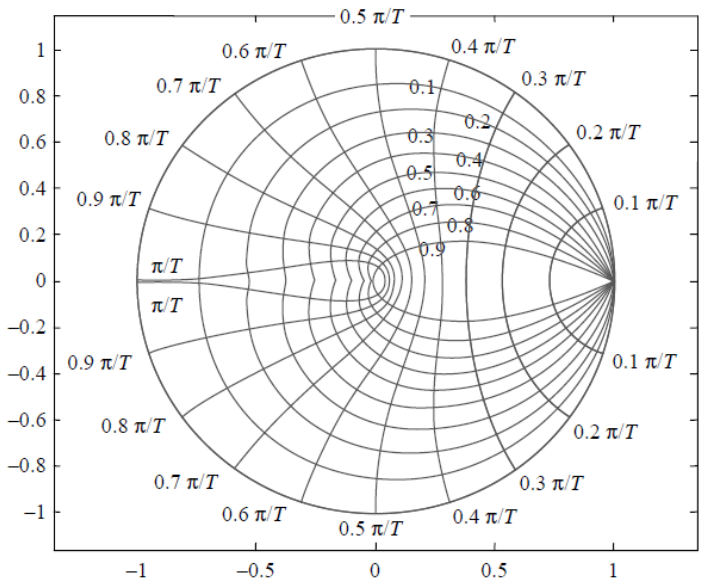

Figure: Constant ζ and ω_n contours in the z-plane.

The closed-loop transfer function

The following observations can be made by examining the spiral equation $|z| = e^{\frac{-\zeta(\pi\theta/180^\circ)}{\sqrt{1-\zeta^2}}}$

1. For every ζ value, there are two spirals corresponding to negative and positive angles θ. The negative spiral is below the real axis and is the mirror image of the positive θ spiral.
2. For a given spiral, the magnitude of the pole drops logarithmically with its angle.
3. At the same angle θ, increasing the damping ratio gives smaller pole magnitudes. Hence, the spirals are smaller for larger θ values.

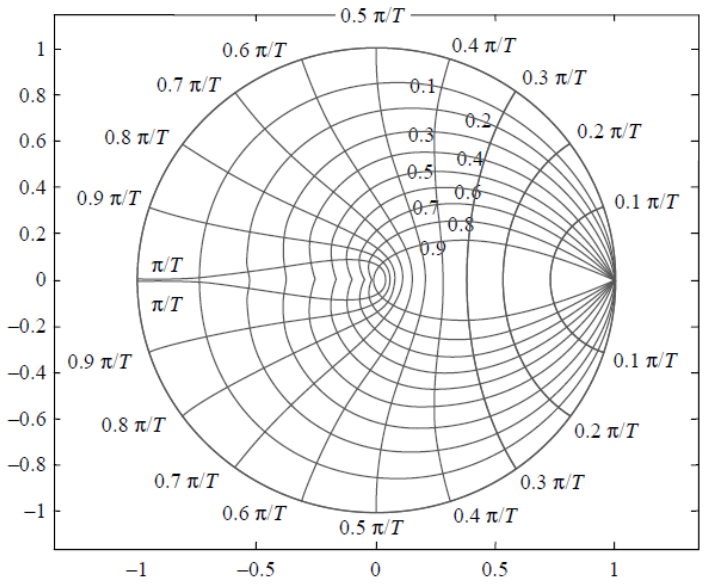

Figure: Constant ζ and ω_n contours in the z-plane.

The closed-loop transfer function

4. All spirals start at $\theta = 0$, $\mid z \mid = 1$ but end at different points

5. For a given damping ratio and angle θ, the pole magnitude can be obtained by substituting in $\mid z \mid = e^{\frac{-\zeta(\pi\theta/180^\circ)}{\sqrt{1-\zeta^2}}}$. For a given damping ratio and pole magnitude, the pole angle can be obtained by substituting in the equation

$$\theta = \frac{\sqrt{1-\zeta^2}}{\zeta} \mid \ln(\mid z \mid) \mid$$

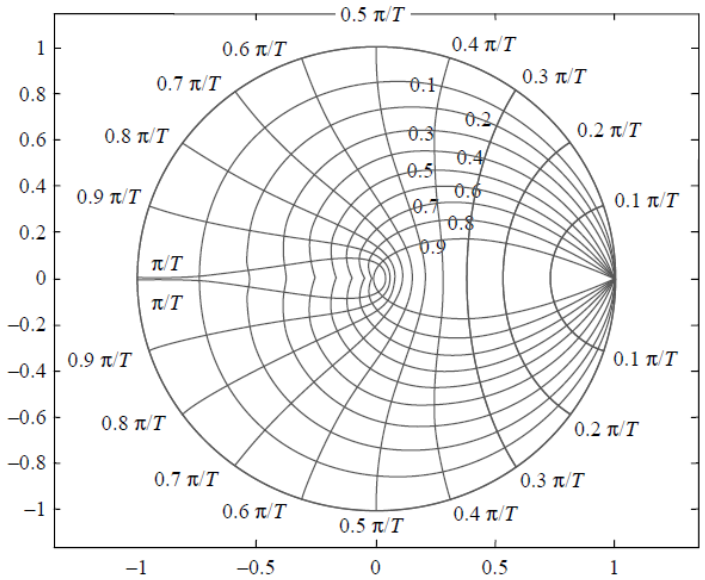

Figure: Constant ζ and ω_n contours in the z-plane.

The closed-loop transfer function

The specifications for z-domain design are similar to those for s-domain design. Typical design specifications are as follows:
Time constant: This is the time constant of exponential decay for the continuous envelope of the sampled waveform. The sampled signal is therefore not necessarily equal to a specified portion of the final value after one time constant. The time constant is defined as

$$\tau = \frac{1}{\zeta\omega_n}$$

Settling time: The settling time is defined as the period after which the envelope of the sampled waveform stays within a specified percentage (usually 2%) of the final value. It is a multiple of the time constant depending on the specified percentage. For a 2% specification, the settling time is given by

$$T_s = \frac{4}{\zeta\omega_n}$$

The closed-loop transfer function

The specifications for z-domain design are similar to those for s-domain design. Typical design specifications are as follows:
Frequency of oscillations: This frequency is equal to the angle of the dominant complex conjugate poles divided by the sampling period.
Other design criteria such as the percentage overshoot, the damping ratio, and the undamped natural frequency can also be defined analogously to the continuous case.

Proportional control design in the z-domain

Example. Design a proportional controller for the digital system $L(z) = \frac{1}{(z-1)(z-0.5)}$ with a sampling period $T = 0.1$ s to obtain

1. A damped natural frequency of 5 rad/s
2. A time constant of 0.5 s
3. A damping ratio of 0.7

Solution. After some preliminary calculations, the design results can be easily obtained using the **rlocus** command of MATLAB. The following calculations, together with the information provided by a cursor command, allow us to determine the desired closed-loop pole locations:

1. The angle of the pole is $\omega_d T = 5 \times 0.1 = 0.5$ rad or 28.62°

2. The reciprocal of the time constant is $\zeta\omega_n = 1/0.5 = 2$ rad/s. This yields a pole magnitude of $e^{-\zeta\omega_n T} = 0.82$.

3. The damping ratio given can be used directly to locate the desired pole.

Proportional control design in the z-domain

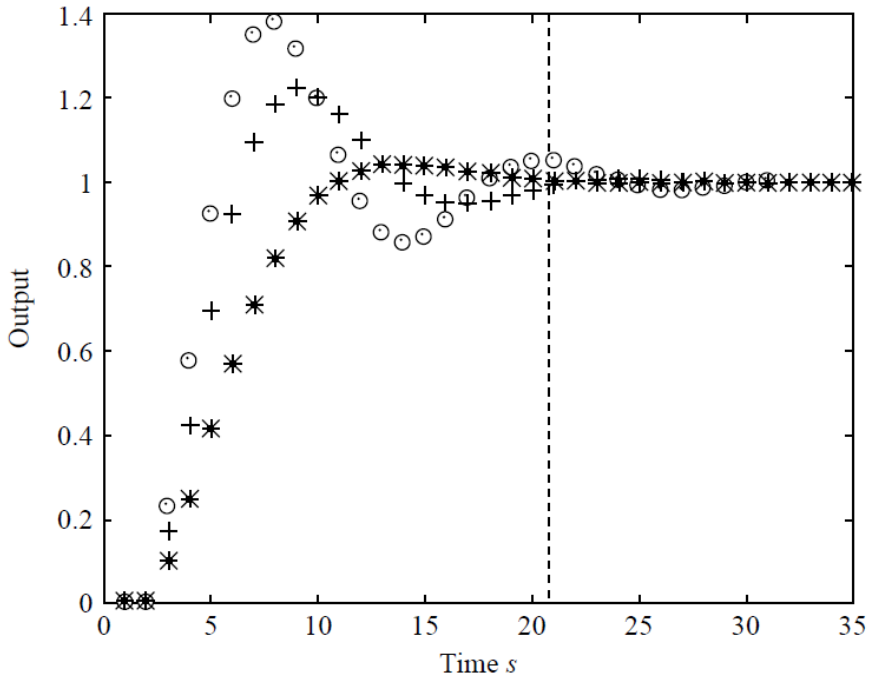

Figure: Time response for the designs of the Table below.

Design	Gain	ζ	ω_n rad/s
(a)	0.23	0.3	5.24
(b)	0.17	0.4	4.60
(c)	0.10	0.7	3.63

Figure: Proportional Control Design Results.

Proportional control design in the z-domain

Example. consider the system $G(s) = \frac{1}{s(s+5)}$. Design a proportional controller for the unity feedback digital control system with analog process and a sampling period $T = 0.04$ s to obtain:

- A steady-state error of 10% due to a ramp input and a damping ratio of 0.7

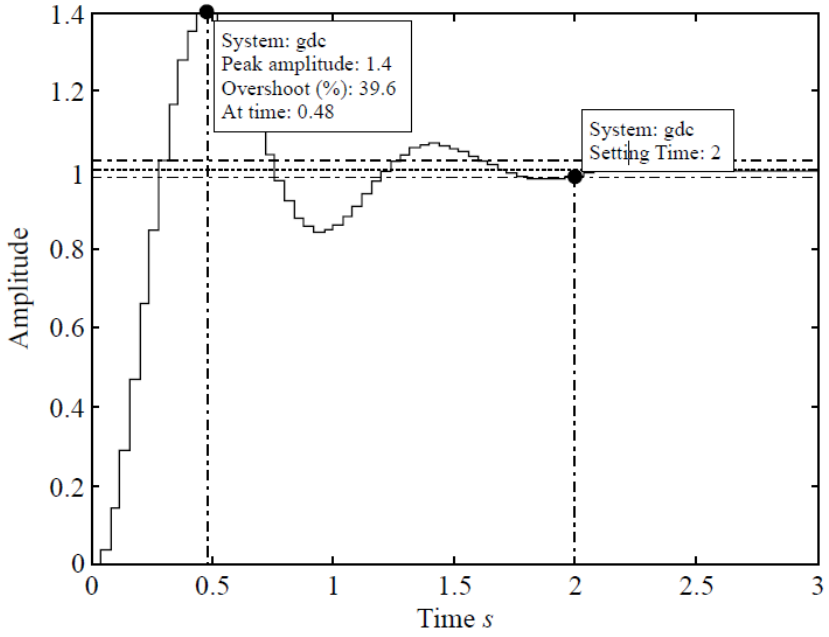

Figure: Proportional Control Design Results for K=50.

Thanks

Questions please